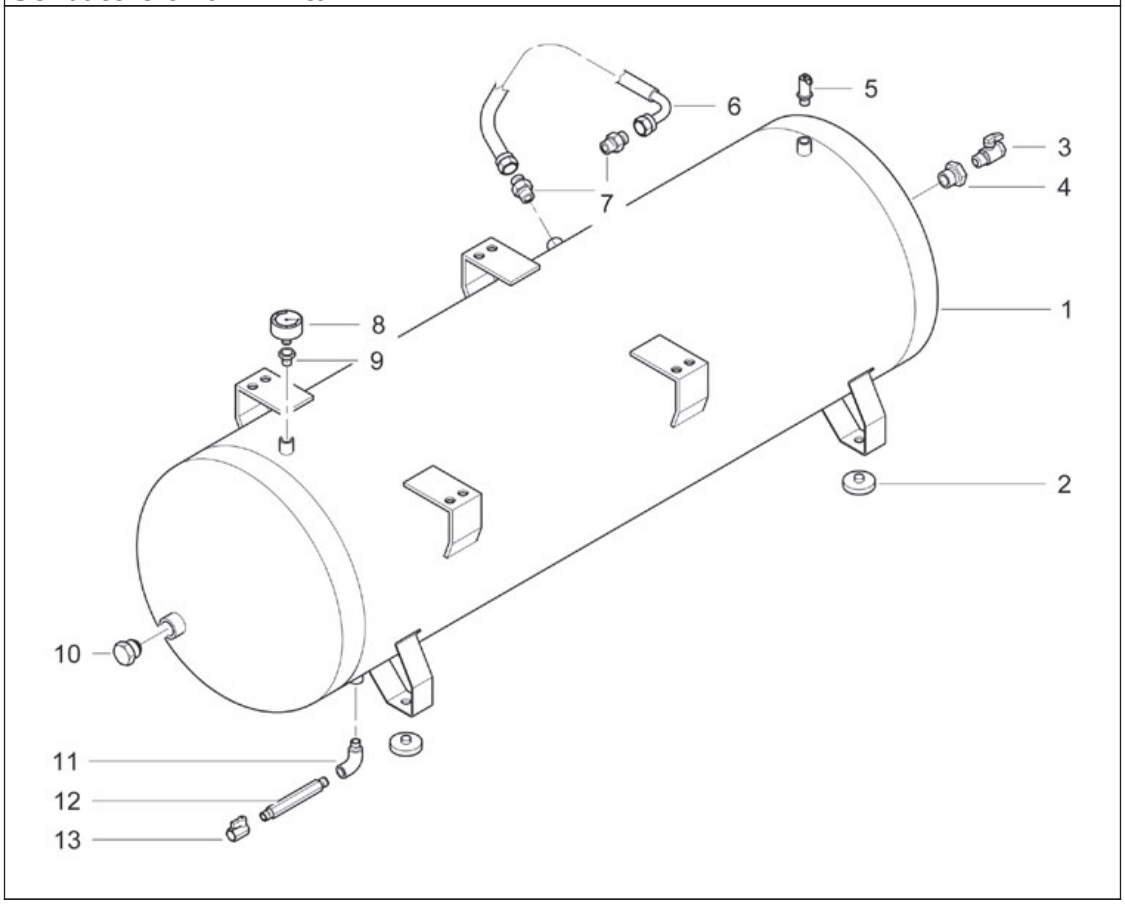Serbatoio aria / Air tank